Drinks Federation of South Africa

UNITED FOR GOOD.

THE ALCOHOL INDUSTRY COMMUNICATIONS CODE OF CONDUCT

TABLE OF CONTENTS

Preamble 03
Legislative Aims and Implementation 05
Key Principles 05

Section 1: Scope 06

Section 2: Commercial Communication Code Standards 09

2.1 Adult Appeal 10
2.2 Responsible Drinking 11
2.3 Brand Promotions, Events and Competitions 11
2.4 Sexual or Athletic Success and Respect for Others 12
2.5 Influencers on Social Media and Emerging Platforms 13
2.6 Alcohol Content 17
2.7 Product Information and Health Warnings 17
2.8 Violence and Illicit Activity 18
2.9 Responsible Drinking Messages 18
2.10 Brand Names 19
2.11 Alcohol-Free, Non-Alcohol Beverages 19
2.12 Additional Placement Requirements for Specific Media 19

Section 3: Code of Conduct Administration and Complaints Process 22

3.1 Commercial Communication Enforcement 22
3.2 Scope of Authority 22
3.3 ARB Complaints Review Process and the Alcohol Appeals Committee 23
3.4 The Complaint Resolution Process 25

Section 4: Raising Awareness of the Enhanced Self-Regulatory Process 27

Section 5: Changes to this Code of Conduct 29

Section 6: Dissolution of this Code of Conduct 31

Section 7: Media Placement Requirements for Advertisers and Media Buying Agencies 34

7.1 Introduction 34
7.2 Television 35
7.3 Radio 37
7.4 Cinema 38
7.5 Print 40
7.6 Outdoor 42
7.7 Advertorials 44
7.8 Digital 44
7.9 Vehicle Livery and Branded Fleets 48
7.10 Additional Rules for Sport, Music, Arts, and Cultural Sponsorships 52
7.11 Celebrity Fan Pages and Advertising 53
7.12 Additional Rules for “Brand Homes” 54

PREAMBLE

The purpose of this Alcohol Industry Code of Conduct (the "Code") is to represent a firm commitment by the Drinks Federation of South Africa (the “DF-SA”) and Aware.org members to maintain high standards of responsibility and ethical conduct in all their commercial communication activities. Compliance entails adherence to both the letter and spirit of the Code of Conduct.

The Code governs all forms of Commercial Communication, including brand marketing, promotion, and advertising of alcoholic beverages in all media.

The Code of Conduct is founded upon three fundamental principles. They are:

1. All manufacturers, distributors, and sellers of alcohol have a duty to comply with existing laws, regulations, and licensing requirements, recognising this Code of Conduct builds upon those foundational responsibilities to further the aims of the Act.

2. Society’s values and norms are ever-changing, but respect for human dignity is timeless and, therefore, must be demonstrated whenever marketing and promoting alcohol.

3. The approach to enhanced self-regulation set out in this Code of Conduct is a proportionate way to protect consumers and society from improper practices, provide prompt and fair resolution to complaints, and enable legal alcohol to be promoted and sold responsibly in a free market economy.

The August 2023 edition of the Code of Conduct has been adapted from the Aware.org code that it had previously enforced. Oversight of Commercial Communication now falls to DF-SA, while Aware.org will continue with public service communications focused on responsible drinking and social awareness educational initiatives. The Code will be reviewed every three years (or earlier if the need arises) to reflect emerging technologies and evolving societal values and norms. Companies shall implement its provisions incrementally into their operations but no later than one year from the adoption of this Code of Conduct.

“THE PURPOSE OF THIS ALCOHOL INDUSTRY COMMUNICATIONS CODE OF CONDUCT IS TO REPRESENT A FIRM COMMITMENT BY THE INDUSTRY TO MAINTAIN A HIGH STANDARD OF RESPONSIBILITY AND ETHICAL CONDUCT IN ALL THEIR COMMERCIAL COMMUNICATION ACTIVITY.”

LEGISLATIVE AIMS AND IMPLEMENTATION

The DF-SA and its members fully support the aims of the National Liquor Act, 2003 (the "Act") and its implementation and this Code complements the regulatory requirements that already exist in South Africa.[i,ii] The DF-SA members have committed to the Code's guidelines, including its enforcement system that works in collaboration with the Advertising Regulatory Board (ARB), which is designed to protect against irresponsible marketing practices.

KEY PRINCIPLES

The Code of Conduct is founded upon three fundamental principles. They are:

1

All manufacturers, distributors, and sellers of alcohol have a duty to comply with existing laws, regulations, and licensing requirements, recognising this Code of Conduct builds upon those foundational responsibilities to further the aims of the Act.

2

Society's values and norms are ever-changing, but respect for human dignity is timeless and, therefore, must be demonstrated whenever marketing and promoting alcohol.

3

The approach to enhanced self-regulation set out in this Code of Conduct is a proportionate way to protect consumers and society from improper practices, provide prompt and fair resolution of complaints, and enable legal alcohol to be promoted and sold responsibly in a free market economy.

i National Liquor Act, 2003, Objects of the Act, para 2, p. 17-18.

ii National Liquor Act, 2003, Conditions of registration, Chapter 3, para 13 (1) (b).

SECTION 1

SECTION 1

SCOPE

1.1 This Code of Conduct applies to all DF-SA and Aware.org members. By their commitment to the Code, they undertake that their commercial communication activities are and will be, at all times, responsible, legal, decent, honest, and truthful, conforming to good, ethical business practices.

1.2 This Code of Conduct governs all forms of brand marketing, promotion, and advertising of alcoholic beverages in all media including, but not limited to, television, radio, print, billboards, digital and social media, direct marketing, text messaging, packaging, brand promotions, brand public relations activities (paid or unpaid), experiential events, brand event sponsorships, product placement, merchandising, and point-of-sale ("Commercial Communication"). Brand event sponsorship (including sport, music, and events) means any commercial agreement by which a sponsor contractually provides financing or other support to establish an association between the sponsor's brand and a sponsorship property to grant certain agreed direct or indirect benefits.

1.3 Commercial Communication does not include communication dedicated to responsible retailing, responsible drinking, or social awareness educational initiatives.

1.4 This Code of Conduct does not apply to public service communications dedicated solely to curtailing alcohol abuse; corporate communications conveying factual company information; user-generated content on social media platforms or pages that are unaffiliated with a producer; or to Commercial Communications for alcohol-free or non-alcohol beverages, provided those beverages do not share a brand name with an alcohol product and comply with Section 2.10.

“THIS CODE OF CONDUCT GOVERNS ALL FORMS OF BRAND MARKETING, PROMOTION, AND ADVERTISING OF ALCOHOLIC BEVERAGES IN ALL MEDIA”

SECTION 2

SECTION 2

COMMERCIAL COMMUNICATION CODE STANDARDS

2.1 ADULT APPEAL

2.1.1 Commercial Communications may only be placed in print, radio, television, or any form of digital media where, using the best relevant data available, at least 70% of the audience is reasonably expected to be of legal drinking age or older.

2.1.2 No billboards advertising an alcoholic beverage brand or product will be placed within 500 meters of schools, community centres or places of worship that are reasonably identifiable as such. In the case of building wraps and billboards larger than Super 96 size, no alcohol beverage advertisement will be placed within 500 meters of schools, community centres or places of worship that are reasonably identifiable as such. Non-product advertising for the sole purpose of communicating alcohol responsibility messages is exempt under this provision. All alcohol beverage advertising on outdoor media will contain an Authorised Drinking Message as set out in Section 2.8.1

2.1.3 Commercial Communications may not use creative themes or elements that are intended to have primary appeal to people under the legal drinking age. "Primary appeal" means the creative themes or elements have a special attractiveness to people under the legal drinking age beyond the general attractiveness to persons of legal drinking age. Prohibited creative elements include cartoons, icons, characters, music, gestures, celebrities, and phrases or expressions known to be widely popular, primarily with people under the legal drinking age.

2.1.4 Brand event sponsorships are only permitted where at least 70% of the expected audience (i.e., those attending the event and the audience for the broadcast media coverage) are reasonably expected to be over the legal drinking age. Tourism events occurring at production facilities are permitted to include families with accompanied children and shall be exempt from this Section's expected audience attendance requirements.

2.1.5 Brand event sponsorship Commercial Communications and related consumer promotional items may not have primary appeal to people under the legal drinking age (e.g., children's toys). Where sports apparel is sold in children's sizes, those items may not include an alcohol brand name or logo, even when the official team kit features the alcohol brand.

2.1.6 The use of sport, music, film or television, or social media personalities ("celebrities"), whether paid or unpaid, in advertising or brand promotions, is acceptable if they are, and appear to a reasonable person to be, at least 21 years of age; shown to be behaving in an acceptable and responsible manner; and are in an age-appropriate setting. The use of celebrities who are at least 21 years of age but who appeal primarily to an underage audience is strictly prohibited, regardless of whether it is an alcohol or alcohol-free brand. No celebrities may be seen to be consuming alcohol, and if they specifically address their audience, their message must include a responsible drinking statement.

2.1.7 All alcohol brand-controlled websites and social media pages must have an age verification mechanism where the visitor attests that they are of legal drinking age. When a visitor enters a date of birth indicating they are under the legal drinking age, they should be redirected to Aware.org or a similar non-profit company website dedicated exclusively to responsible drinking.

2.1.8 Commercial Communications should not be placed or advertised on third-party digital platforms that do not have a date of birth verification mechanism or some other verifiable audience demographic measurement system.

2.1.9 Whenever user-generated content is on an alcohol brand-controlled website or social media page, all people who are clearly visible must be, and appear to a reasonable person to be, over the legal drinking age unless they are obviously incidental and in the background.

2.1.10 Frequent moderation of user-generated content on an alcohol brand-controlled website or social media page must be carried out to ensure compliance with this Code of Conduct. Where it is non-compliant, the content must be promptly removed.

2.1.11 Direct Commercial Communications may not be levelled at persons under the legal drinking age. They must comply with current regulations to safeguard consumer privacy, ensure data protection, and enable consumers to opt out of future direct communications. If an underage person unintentionally receives direct communications, parents and/or legal guardians may request the opt-out on their children's behalf.

2.1.12 Alcohol brands may not sponsor a sporting team with players under the legal drinking age. Sports development programmes may be sponsored where players are between the ages of 18-21, but only corporate logos may be used in connection with that sponsorship.

2.2 RESPONSIBLE DRINKING

2.2.1 Commercial Communications that depict responsible drinking among adults as a relaxed, sociable, and enjoyable part of a well-lived life have a role to play in reinforcing a responsible approach to drinking.

2.2.2 Commercial Communications should never show drinkers as losing control or having diminished movement, speech, or vision due to drinking alcohol.

2.2.3 Commercial Communications must not show or imply drinking before or during activities requiring a high degree of skill, concentration, or sobriety, including driving, operating machinery, sporting, or other athletic activities.

2.2.4 Commercial Communications may not depict or include visibly pregnant women.

2.2.5 Commercial Communications should make it clear that drinking is a personal choice and never disparage people who choose to abstain from drinking or consume alcohol responsibly.

2.3 BRAND PROMOTIONS, EVENTS AND COMPETITIONS

2.3.1 No brand promotions, events or competitions related to an alcohol brand should be directed primarily at persons under the legal drinking age, nor may any brand promotions, events or competitions encourage the rapid, irresponsible, or excessive consumption of alcohol (e.g., "boat races" or "down-downs).

2.3.2 No brand promotion, events, or competitions related to an alcohol brand should be directed primarily at persons under the legal drinking age, even if such activity is in the form of a sponsorship. It should be stated explicitly that persons under the legal drinking age are ineligible to participate in events and competitions aimed at promoting an alcohol brand and/or product.

2.3.3 In the case of on-site brand promotions, events, or competitions, all promotional team representatives must be, and appear to a reasonable person to be, at least 21 years of age.

2.3.4 Consumers who attend brand promotions must be encouraged to assume personal responsibility for their decision to drink or not to drink.

2.3.5 Extended promotions and tastings may not be confined to the consumption of alcohol beverages alone. Appropriate snacks and/or meals should be available. Samplings and tastings must be administered by a promoter, and quantities for sampling shall not exceed 100ml.

2.3.6 On-campus promotions must be arranged in a manner which meets the approval of the university authorities, and when in doubt, proof of age must be requested to ensure that alcohol beverages are not served to those who are under the legal drinking age.

2.4 SEXUAL OR ATHLETIC SUCCESS AND RESPECT FOR OTHERS

2.4.1 Commercial Communications may reflect South Africa's diversity of people from all walks of life enjoying various everyday social experiences and occasions.

2.4.2 Commercial Communications should not imply that drinking resulted in business, social, professional, academic, athletic, financial, or other personal success, nor that drinking can solve personal problems, overcome inhibitions, shyness, or social barriers, or enable social acceptance.

2.4.3 Commercial Communications should not be suggestive of sexual indulgence or permissiveness; contain sexually lewd or indecent images or language; portray nudity or near-nudity; denigrate individuals based on sexual orientation; denigrate any gender, including through distasteful or overt sexual poses or actions; use gender stereotypes; or claim or imply that drinking can contribute directly to sexual success or seduction. Clothing must be decent, appropriate to the context (e.g., swim attire at a beach or pool), and not sexually suggestive in nature.

2.4.4 No Commercial Communications may show an athlete or former athlete consuming alcohol. Sports sponsorships are permitted under this Code of Conduct.

2.4.5 Where Commercial Communications celebrate winning results of athletic competitions, they may show depictions of celebration after the competition has finished, provided that the athletes are and appear to a reasonable person to be of legal drinking age.

2.5 INFLUENCERS ON SOCIAL MEDIA AND EMERGING PLATFORMS (PAID CONTENT ONLY)

2.5.1 **Definition of Influencer (Paid Engagement):** For the purposes of this Code, an influencer refers to any individual who has been formally contracted and financially compensated (monetary payment or equivalent contractual consideration) by a brand or its agency to create, publish, promote, or amplify content marketing alcoholic beverages through their digital platforms or audience reach. This definition applies exclusively to paid commercial relationships.

2.5.2 **Definition of Social Media and Emerging Platforms:** Social media refers to any digital platform, channel, or application that enables users to create, share, or interact with content, including but not limited to Instagram, Facebook, X (formerly Twitter), TikTok, YouTube, Snapchat, Twitch, blogs, podcasts, and similar current or emerging platforms.

2.5.3 Influencers engaged in paid alcohol marketing must:

2.5.3.1. Reasonably appear to be at least 25 years of age.
2.5.3.2. Not have disproportionate appeal to persons under the legal drinking age.
2.5.3.3. Demonstrate, to the best of the company's or agency's knowledge, no public association with irresponsible alcohol use or harmful drinking behaviours.
2.5.3.4. Have an audience composition where at least 70% of followers or viewers are confirmed to be above the legal drinking age, based on available platform insights or third-party verification tools.

2.5.4 Paid influencer content must not:

2.5.4.1. Be directed at or feature pregnant women or persons under the legal drinking age.
2.5.4.2. Depict or encourage excessive, irresponsible, or illegal alcohol consumption.
2.5.4.3. Refer to any health benefits associated with consuming alcoholic beverages.
2.5.4.4. Suggest that alcohol consumption improves mental, physical, or sporting performance.
2.5.4.5. Imply that drinking alcohol contributes to social, sexual, or personal success.
2.5.4.6. Glamorise or trivialise irresponsible alcohol consumption.
2.5.4.7. Depict alcohol consumption in connection with unsafe, high-risk, or illegal activities, including but not limited to dangerous stunts, unsafe transport practices, gambling, or similar risky behaviour.

2.5.5 Brands must provide paid influencers with clear written contractual guidelines outlining expectations and responsibilities aligned with this Code. These must include:

2.5.5.1. Compliance with applicable national legislation, regulatory standards, and the Communications Code of Conduct.
2.5.5.2. Inclusion of a valid ARA (Alcohol Responsibility Agreement), provided by the brand or agency, clearly incorporated within the final approved creative assets.
2.5.5.3. Mandatory transparent disclosure of the paid commercial relationship (e.g., #ad, #sponsored, or use of platform-specific branded content tools).
2.5.5.4. Instructions on the use of age-restriction tools where available.
2.5.5.5. Guidance on tone, language, and imagery to ensure responsible messaging around alcohol. Such content must be respectful, non discriminatory, and non-exploitative, and must not demean, stereotype, or undermine the dignity of any individual or group.
2.5.5.6. A reminder that all content must not glamourise or trivialise alcohol consumption.

2.5.6 Brands or their appointed agencies must monitor paid influencer content for compliance with this Code.

2.5.7. Brands must take reasonable steps to avoid resharing or amplifying third-party content that violates this Code.
Brands cannot reasonably control independent third-party reposting; however, official brand channels must not distribute or endorse content that undermines the purpose or principles of this Code.

For the purposes of this provision, “reasonable steps” refers to proportionate and practical measures taken to mitigate foreseeable risks arising from redistribution of influencer content. Such measures may include, but are not limited to:

2.5.7.1. Ensuring influencer agreements require compliance with this Code and applicable regulatory requirements;
2.5.7.2. Implementing appropriate content approval processes prior to publication;
2.5.7.3. Providing influencers with clear guidance on responsible marketing practices and prohibited associations (including content that may appeal to minors, depict irresponsible consumption, or associate alcohol with gambling, unsafe behaviour, or social or sexual success);
2.5.7.4. Utilising available platform tools, where feasible, to apply age restrictions or limit remixing, downloading, or repurposing of branded alcohol content;

2.5.7.5. Conducting proportionate monitoring of influencer content following publication; and

2.5.7.6. Taking prompt and appropriate action, including requesting removal, reporting to platform operators, or issuing clarifications, where reposted or shared content creates material compliance or reputational risk.

This provision does not require brands to exercise absolute control over independent third-party conduct or to prevent all forms of reposting or sharing. The obligation is one of reasonable foreseeability, due diligence, and proportionate response.

2.5.8 Where non-compliant content is identified, corrective action must be taken within 24 hours of notification to amend or remove the content. Repeated or serious violations should result in formal reassessment or termination of the paid influencer partnership.

2.5.9. Brands must conduct periodic reviews of paid influencer campaigns — including quarterly monitoring and an annual compliance review — to ensure ongoing alignment with the Communications Code of Conduct and to adapt to evolving platform dynamics.

“LEGISLATION REQUIRES THAT THE ALCOHOL STRENGTH BE PROVIDED TO CONSUMERS TO ENABLE THEM TO MAKE INFORMED CHOICES.”

2.6 ALCOHOL CONTENT

2.6.1 Legislation requires that the alcohol strength be provided to consumers to enable them to make informed choices. Alcohol labels should list the alcohol content of the product in a factual manner only and not as the principal subject of a label.

2.6.2 Non-label forms of Commercial Communications should not feature or depict a product's alcohol content unless the alcohol content by volume is at or below 2.5% (i.e., it is a lower-alcohol product).

2.6.3 Advertising of alcohol content is not permitted.

2.7 PRODUCT INFORMATION AND HEALTH WARNINGS

2.7.1 Factual information provided to consumers in Commercial Communication about alcohol consumption must be accurate, evidence-based, and balanced so consumers can make informed decisions about drinking.

2.7.2 Producers have an essential role in their Commercial Communication to remind consumers of the risks associated with alcohol, and, therefore, must comply with all health warning regulations pertaining to alcohol beverages, including using at least one of the following warnings on alcohol beverage labels:

2.7.2.1 Alcohol reduces driving ability; don't drink and drive.
2.7.2.2 Don't drink and walk on the road; you may be killed.
2.7.2.3 Alcohol increases your risk of personal injuries.
2.7.2.4 Alcohol is a major cause of violence and crime.
2.7.2.5 Alcohol abuse is dangerous to your health.
2.7.2.6 Alcohol is addictive or
2.7.2.7 Drinking during pregnancy can be harmful to your unborn baby.

Additionally, the Authorised Responsible Drinking Message "Not for Persons Under the Age of 18" must be included on alcohol beverage labels to supplement the warning messages mandated by law.

2.7.3 Commercial Communications for alcohol brands may not make or imply health claims or suggest potential net health benefits from consuming certain forms of alcohol, nor may they include terms like "healthier," "better for you," or "safer." Product labels may include factual information about the products, such as calorie and carbohydrate content, to enable consumers to make informed choices. Commercial Communications may (or must) include nutritional information that is permitted or required under food and labelling regulations. Nutrition claims may not suggest that an alcohol beverage is a good or preferred dietary source of nutrients, vitamins, or minerals without also disclosing the full range of potential health risks associated with drinking alcohol.

2.7.4 Commercial Communications may not claim that alcohol has curative qualities or offer alcohol as a performance enhancer, stimulant, sedative, or tranquiliser.

2.8 VIOLENCE AND ILLICIT ACTIVITY

2.8.1 Commercial communication may not portray or imply that aggressive, violent or anti-social behaviour is ever appropriate, even as part of a joke or prank.

2.8.2 Commercial communication may not portray or in any way endorse or glamourise illicit drugs, drug culture, organised crime, or local gang activity.

2.9 RESPONSIBLE DRINKING MESSAGES

2.9.1 In addition to any legislative requirements set out in Section 2.6.2, Commercial Communications must include a clear, legible, and prominent responsible drinking message that has been approved by the Drinks Federation of South Africa CEO Council of Members in relation to the general content of the message, font, and size ("Authorised Responsible Drinking Message"). Including, but not limited to:

2.9.1.1 Don't Drink and Drive,
2.9.1.2 Not for Persons Under the Age of 18,
2.9.1.3 Pregnant Women Should Not Drink Alcohol, Be Responsible

2.9.2 For digital platforms, the Authorised Responsible Drinking Messages must be used on websites, social media platforms, and shareable, downloadable assets, including videos, photos, applications or user-generated content that is incorporated into alcohol branded Commercial Communications. Where a small screen format is used, for example, Instagram or Twitter, the "Not for Persons Under the Age of 18" token may be used as an alternative.

2.9.3 Permanent point-of-sale (e.g., glassware, neon signs, chairs) and consumer novelty items (e.g., pens, t-shirts, caps) are exempt from displaying the Authorised Responsible Drinking Message.

2.9.4 All forms of transport may not display Corporate or Alcohol Brand advertising, except for cars, bakkies (not exceeding 1 tonne) and minibuses used for operations, staff or hospitality transport according to the Guidelines provided in Section 7.11. Vehicles specific to brand and event activations are deemed to be in the same category as outdoor advertising (in transit to an event and stationary at the event). They must comply with the principles set out in Section 7.6.1.3 and 7.6.1.4 of the Communications Code of Conduct.

2.10 BRAND NAMES

2.10.1 Alcohol brand names and their corresponding product packaging should reflect a high regard for social responsibility and responsible drinking. Brand names or product packaging that conveys sexual innuendo, the intoxicating effect of alcohol, or that use colloquialisms for alcohol (e.g., "dop," "booze," or "grog"), illegal activity, alcohol abuse, violence, illicit drugs or drug culture, gang terminology, or any other activities regarded by a reasonable person to be harmful to individuals or communities is prohibited.

2.11 ALCOHOL-FREE, NON-ALCOHOL BEVERAGES

2.11.1 For purposes of the Code of Conduct, "Alcohol-free" shall be defined as alternative beverages whose profiles mirror alcohol drinks but which have an alcohol content of 0.0% to 0.05% by volume, and "non-alcohol" shall be defined as alternative beverages with an alcohol content between 0.05% to 0.5% by volume.

2.11.2 Alcohol-free and non-alcohol beverages may only be promoted and sold to people of legal drinking age.

2.11.3 Alcohol-free and non-alcohol beverages may be sold or distributed at locations that do not hold a liquor licence.

2.11.4 Commercial Communications for Alcohol-free or non-alcohol beverages shall comply with all requirements of this Code of Conduct for alcohol-branded Commercial Communications.

2.11.5 Notwithstanding Section 2.10.4 above and provided that the beverages do not carry an alcohol brand name, Alcohol-Free and non-alcohol alternative beverages may be promoted as normal and acceptable choices, including for occasions when drinking an alcohol beverage is unacceptable or irresponsible, such as when expecting to drive, attending a business lunch, or when engaging in an activity that requires a high degree of alertness. Alcohol-free or non-alcohol beverages may also be positioned as a sociable option for avoiding over-consuming alcohol.

2.12 ADDITIONAL PLACEMENT REQUIREMENTS FOR SPECIFIC MEDIA

2.12.1 To further the aims of the Act and this Code of Conduct, specific placement requirements are set out in Media Placement Requirements for Advertisers and Media Buying Agencies. These Media Placement Requirements may be found in Section 7 or at www.drinksfederationsa.co.za.

“PRODUCERS HAVE AN ESSENTIAL ROLE IN THEIR COMMERCIAL COMMUNICATION TO REMIND CONSUMERS OF THE RISKS ASSOCIATED WITH ALCOHOL.”

SECTION 3

SECTION 3

CODE OF CONDUCT ADMINISTRATION AND COMPLAINTS PROCESS

Section 3 sets out the system for enforcing this Alcohol Industry Code of Conduct ("Code of Conduct"). Specifically, all activities falling within the scope of Code Section 1 and set out throughout this document ("Commercial Communication") shall be administered under the auspices of the Drinks Federation of South Africa and enforced by the Advertising Regulatory Board ("ARB") as set out below.

3.1 COMMERCIAL COMMUNICATION ENFORCEMENT

3.1.1 The ARB shall be the arbitrator that decides on the validity of alleged Section 2, Commercial Communications, violations raised by both members of the public and competitors.

3.2 SCOPE OF AUTHORITY

3.2.1 The ARB's authority over Commercial Communications shall extend to all signatories to this Code of Conduct in whatever form they become a signatory. Where a business is not a member of its sector's trade association and/or has not signed onto this Code of Conduct, the ARB may proceed with adjudicating alleged Code of Conduct violations against that business and, if found to be in violation, shall give notice to the relevant Minister for review and resolution.

3.3 ARB COMPLAINTS REVIEW PROCESS AND THE ALCOHOL APPEALS COMMITTEE

3.3.1 Review Process

3.3.1.1 Any complaint involving a Commercial Communication under this Code of Conduct received by the ARB (www.arb.org.za) or the DF-SA shall first be referred to the accused business for resolution.

3.3.1.2 If a business receives a complaint about its advertising directly from a consumer, it shall notify the DF-SA of that complaint and the resolution of that complaint, if any.

3.3.1.3 Where the complaint is not resolved to the complainant's satisfaction, the advertiser shall refer the matter to the ARB for review and decision. The ARB Directorate shall review the complaint according to its established protocols, ensuring due process throughout (i.e., notice, the right of reply, and transparent decision-making).

3.3.1.4 Where appropriate, the ARB shall enlist the support of external subject matter experts to ensure a fair assessment of the matter. This process and all decisions of the ARB, along with the rationale for any decision, shall be reported on the ARB's and Drinks Federation of South Africa's websites and in their annual reports.

3.3.1.5 A link to the ARB website will be included on the Drinks Federation of South Africa's website.

3.3.2 Alcohol Appeals Committee

3.3.2.1 Any business that receives an adverse decision involving its Commercial Communication from the ARB shall have the right of appeal.

3.3.2.2 ARB shall establish an Alcohol Appeals Committee ("AAC"), which shall be charged with hearing all appeals and rendering a decision. The ruling of the AAC shall be final.

3.3.2.3 The AAC shall consist of five independent arbitrators with extensive backgrounds in consumer protection law and competition law, as well as in the media buying and digital media sectors. Panel members shall not have been previously employed by the alcohol industry. This combination of panel experience will ensure that the AAC will have the necessary independence, experience, and skills to interpret the Code of Conduct, afford the parties due process, and challenge the validity of arguments and data presented by the complaining or responding party.

3.3.3 Procedural Requirements of the Complaints Review Process and Alcohol Appeals

3.3.3.1 The ARB, in coordination with the DF-SA, shall establish in writing the procedural requirements under which the Complaints Review Process and Alcohol Appeals Committee will be administered so as to ensure due process to all parties involved.

3.3.4 Pre-clearance Services

3.3.4.1 The ARB desires, in the first instance, to prevent breaches of the Code of Conduct's Commercial Communication provisions. For that reason, an optional, non-binding pre-clearance advisory service is to be made available to signatories and to those businesses whose license is conditioned upon complying with this Code of Conduct.

3.3.5 Funding of the ARB for Code of Conduct Enforcement

3.3.5.1 The funding for the ARB's enforcement of the Commercial Communications provisions of this Code of Conduct shall be through the Drinks Federation of South Africa. A funding review shall take place every five years. There shall be no cost to a consumer for having a complaint adjudicated as set out in this Code of Conduct. In the case of a complaint being made by a competitor, the losing party shall bear the cost of the complaint, as set out in a pre-agreed fee table established by the ARB panel.

3.3.6 Sanctions for Violations of the Code of Conduct

3.3.6.1 Where a complaint to the ARB has been upheld, the ARB shall have the authority to impose sanctions. These sanctions shall consider factors such as whether the business sought pre-clearance advice that it subsequently followed, whether the business is a repeat offender, the time that has elapsed since the last violation, and the business's cooperation with the ARB in resolving the dispute.

3.3.6.2 Appropriate sanctions may include a written warning for a first offence, amendment or withdrawal of the offending advertising and marketing, corrective advertising, and, in the most egregious cases of a repeat offender, the ban of all marketing and advertising activity for a period of up to three months.

3.3.6.3 Where the offending business is not a signatory to this Code of Conduct in its own right or through its trade association, the ARB shall nonetheless render a decision along with a recommendation of the appropriate sanction and then refer the matter to the appropriate Minister, Liquor Board, and/or the Department for independent review and enforcement.

3.4 THE COMPLAINT RESOLUTION PROCESS

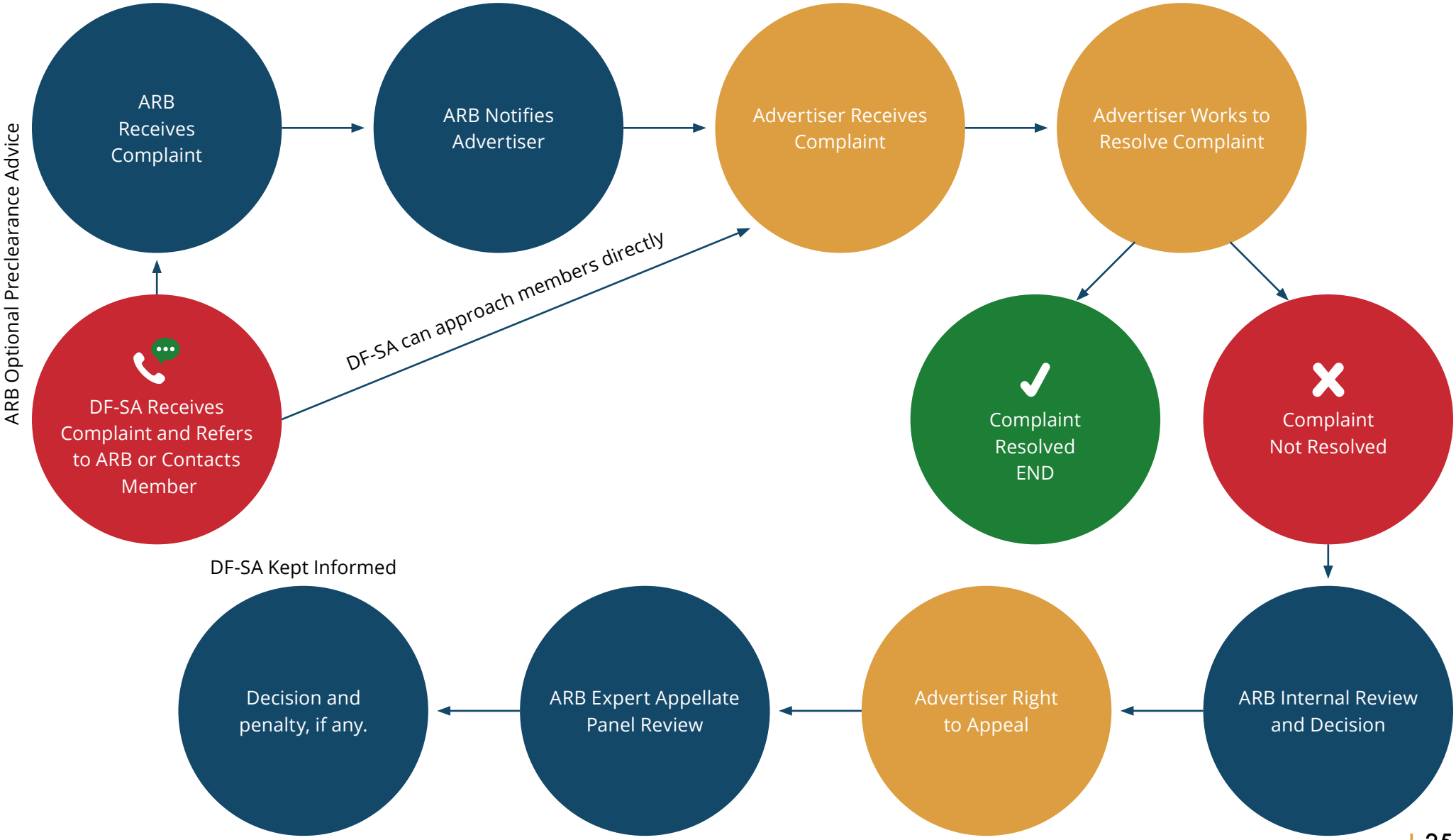

SECTION 4

SECTION 4

RAISING AWARENESS OF THE ENHANCED SELF-REGULATORY PROCESS

4.1 The Drinks Federation of South Africa and its members shall promote the existence of this Code of Conduct and the ARB Commercial Communication enforcement process via their respective websites.

SECTION 5

SECTION 5

CHANGES TO THIS CODE OF CONDUCT

5.1 This Code of Conduct may be amended from time to time to ensure it remains fit for purpose considering changing societal norms. The protocol for amending this Code of Conduct shall be as follows:

5.1.1 Proposals to amend the Code of Conduct may be put forward by the DF-SA leadership team or Members of the DF-SA Board of Directors every three years (or earlier upon special application), which shall consider the proposal, the rationale for the change, and any broader context.

5.1.2 The DF-SA Board shall work with the DF-SA leadership team to prepare the amendment and table it for a vote at the next available Drinks Federation of South Africa's CEO Council of Members meeting.

5.1.3 Where the CEO Council of Members approves the amendment by a majority vote, the amendment shall be adopted. Where appropriate, the timetable for implementing changes shall be specified in the Code of Conduct to allow signatories the ability to adapt their practices or operations, as the case may be.

SECTION 6

SECTION 6

DISSOLUTION OF THIS CODE OF CONDUCT

6.1 This Code of Conduct shall cease to apply if at least 75% of the DF-SA CEO Council of Members so resolves and from the date on which it so resolves. In the event this Code of Conduct ceases to be in effect, the Minister shall be notified, all funding shall cease, and a pro-rata refund of administrative fees, if any, paid shall be made to the DF-SA.

“THE DRINKS FEDERATION OF SOUTH AFRICA ALCOHOL INDUSTRY CODE OF CONDUCT (“CODE OF CONDUCT”) ESTABLISHES THE PRINCIPLES, STANDARDS, AND ENFORCEMENT PROCEDURES FOR THE RESPONSIBLE MARKETING OF ALCOHOL IN SOUTH AFRICA.”

SECTION 7

SECTION 7

MEDIA PLACEMENT REQUIREMENTS FOR ADVERTISERS AND MEDIA BUYING AGENCIES

7.1 INTRODUCTION

The Drinks Federation of South Africa Alcohol Industry Code of Conduct ("Code of Conduct") establishes the principles, standards, and enforcement procedures for the responsible marketing of alcohol in South Africa. The Alcohol Industry Code of Conduct is a living Code. It will be reviewed every three years (or earlier upon special application) to ensure it reflects emerging technologies and evolving societal values and norms.

These Media Placement Requirements for Advertisers and Media Buying Agencies ("Media Placement Requirements") provide further support to manufacturers, distributors, and retailers of alcohol in South Africa and enforcement bodies in the real-world application of the Code of Conduct. In particular, the Media Placement Requirements address Section 2.11. of the Code of Conduct. The Media Placement Requirements may be refreshed at any time on the recommendation of the DF-SA CEO and with the approval of the DF-SA CEO Council of Members.

7.2 TELEVISION

7.2.1 Advertisements may not be transmitted during the commercial breaks immediately before, during or immediately after children's programmes on television or radio.

7.2.2 Advertisements will not be placed in any medium explicitly aimed at children.

7.2.3 Advertisements are to be either preceded or followed by a responsible messaging rider.

7.2.4 In addition to 7.2.1, 7.2.2, and 7.2.3 above, the following rules apply to advertisements in the television medium:

7.2.4.1 Programmes with a verifiable 30% or more viewership of persons under the legal drinking age may not contain alcohol beverage advertisements (this is the so-called 70/30 rule).

7.2.4.2 Alcohol beverage advertisements may only be broadcast between 19h00 and 06h00 from Monday to Friday.

7.2.4.3 Alcohol beverage advertisements may only be broadcast between 12h00 and 06h00 on Saturday and Sunday.

7.2.4.4 In the case of sporting events where the main sponsor is an alcohol beverage company, the 70/30 rule outlined in 7.2.4.1 above and the watershed restriction provided for in 7.2.4.2 and 7.2.4.3 above will still apply for the broadcast of alcohol beverage advertisements.

7.2.4.5 All alcohol beverage advertisements on television will contain the following statement: "Not for Persons Under the Age of 18" and the "Not for Persons Under the Age of 18" token.

7.2.4.6 The last few seconds of any television advertisement should feature the underage statement, read in a voiceover in the same language as the main message. This does not apply to 5" and 10" stings.

7.2.4.7 The voice should be clear, audible and unrushed and may be different from that used in the main message.

7.2.4.8 The minimum specifications for the statement referred to in 7.2.4.5 above are as follows:

7.2.4.8.1 Arial bold is to be used as the standard font.

7.2.4.8.2 True Type Title casing is to be used.

7.2.4.8.3 The statement must be visible and legible and placed at the bottom of the advertisement.

7.2.4.8.4 A white block with a black rule at the top of the block is to be used as a holding device for the underage line.

7.2.4.8.5 The block should be 15% of the height of the advertisement.

7.2.4.8.6 The statement is to run as one unbroken line.

7.2.4.8.7 The whole duration of any TV advertisement should have the statement in the above format.

7.2.4.8.8 A health warning may be included as part of the underage statement, depending on the execution, and providing it does not detract from the underage statement.

#NO 18 aware!.org www.aware.org.za **Not for Persons Under the Age of 18**

- Arial bold is to be used as the standard font.
- True Type Title casing is to be used.
- The statement must be visible and legible and placed at the bottom of the advertisement.

- A white block with a black rule at the top of the block is to be used as a holding device for the underage line.
- The block should be 15% of the height of the advertisement.

#NO 18 aware!.org www.aware.org.za **Not for Persons Under the Age of 18**

A health warning may be included as part of the underage statement, depending on the execution, and providing it does not detract from the underage statement.

The statement is to run as one unbroken line. The whole duration of any TV advertisement should have the statement in the above format.

7.3 RADIO

7.3.1 In addition to 7.2.1, 7.2.2, 7.2.3 and 7.2.4 above, the following rules apply to advertisements in the Radio medium:

7.3.2.1 As the current measurement of listenership only profiles an audience of 16 years and above, DF-SA will assume that such a profile serves as a proxy for those under 16 years of age.

7.3.2.2 For alcoholic beverage advertisements on radio, the 70/30 rule will apply.

7.3.2.3 Alcoholic beverage advertisements will only be broadcast between 19h00 and 06h00 from Monday to Friday.

7.3.2.4 Alcoholic beverage advertisements will only be broadcast between 12h00 and 06h00 on Saturday and Sunday.

7.3.2.5 In addition to the rules above, advertisements for broadcast on radio must consider the programme's appeal to youth, based on verifiable profile data, the programme presenter's profile and the profile of the audience call-ins.

7.3.2.6 All alcohol advertisements on radio will contain, as a minimum, the following statement: "Not for Persons Under the Age of 18".

7.3.2.7 The minimum specifications for this statement are listed below:

7.3.2.7.1 The last few seconds of any radio advertisement should feature the underage statement, read in a voiceover in the same language as the main message.

7.3.2.7.2 The voice should be clear audible and unrushed and may be a different voice to that used in the main message.

7.3.2.7.3 An Authorised Responsible Drinking Message may be included as part of the underage statement, depending on the execution, and providing it does not detract from the underage statement.

7.4 CINEMA

7.4.1 In addition to 7.1.1, 7.1.2, 7.1.3, and 7.1.4 above, the following rules apply to advertisements in the Cinema medium:

7.4.1.1 The 70/30 rule will apply, and alcohol beverage advertisers will ensure that compliance with this rule is achieved through contractual agreements between members and cinema owners.

7.4.1.2 Companies responsible for the selling of cinema advertisement will be required to submit film titles to DF-SA along with a qualitative assessment of the audience profile in terms of the 70/30 rule.

7.4.1.3 All alcoholic beverage advertisements in the cinema will contain the statement: "Not for Persons Under the Age of 18". and the "Not for Persons Under the Age of 18" token. The minimum specifications for this statement are the same as those applicable to television advertising:

7.4.1.3.1 Arial bold is to be used as the standard font.

7.4.1.3.2 True Type Title casing is to be used.

7.4.1.3.3 The statement must be visible and legible and placed at the bottom of the advertisement.

7.4.1.3.4 A white block with a black rule at the top of the block will be used as a holding device for the underage line.

7.4.1.3.5 The block should be 15% of the height of the advertisement.

7.4.1.3.6 The statement is to run as one unbroken line.

7.4.1.3.7 The whole duration of any TV advertisement should have the statement in the above format.

7.4.1.3.8 An Authorised Responsible Drinking Message may be included as part of the underage statement, depending on the execution, and providing it does not detract from the underage statement.

#NO 18 aware!.org www.aware.org.za **Not for Persons Under the Age of 18**

- A white block with a black rule at the top of the block will be used as a holding device for the underage line.
- The block should be 15% of the height of the advertisement.
- The statement is to run as one unbroken line.

- Arial bold is to be used as the standard font.
- True Type Title casing is to be used.
- The statement must be visible and legible and placed at the bottom of the advertisement.
- The whole duration of any TV advertisement should have the statement in the above format.

An Authorised Responsible Drinking Message may be included as part of the underage statement, depending on the execution, and providing it does not detract from the underage statement.

7.5 PRINT

7.5.1 In addition to 7.1.1, 7.1.2, 7.1.3, and 7.1.4 above, the following rules apply to advertisements in the Print medium:

7.5.1.1 The 70/30 rule will apply.

7.5.1.2 The proxy for the age profile will be the same as that used for the radio medium.

7.5.1.3 All advertisements in print will contain the following statement: "Not for Persons Under the Age of 18." and the "Not for Persons Under the Age of 18" token.

7.5.1.4 The minimum specifications for the statement referred to in 7.5.1.4 above – are as follows:

7.5.1.4.1 Arial bold is to be used as the standard font.

7.5.1.4.2 True Type Title casing is to be used.

7.5.1.4.3 A white block with a black rule at the top of the block is to be used as a holding device for the underage line.

7.5.1.4.4 The block should be 15% of the height of the advertisement.

7.5.1.4.5 The block must be at the bottom of the advertisement and must run the entire width of the advertisement.

7.5.1.4.6 Where the advertisement covers more than one page – for example, a four-page foldout, the statement must be displayed on each page.

7.5.1.4.7 An Authorised Responsible Drinking Message may be included as part of the underage statement, depending on the execution, and providing it does not detract from the underage statement.

• Arial bold is to be used as the standard font.
• True Type Title casing is to be used.

• A white block with a black rule at the top of the block is to be used as a holding device for the underage line.
• The block should be 15% of the height of the advertisement.

• The block must be at the bottom of the advertisement and must run the entire width of the advertisement.
• Where the advertisement covers more than one page – for example, a four-page foldout, the statement must be displayed on each page.

7.6 OUTDOOR

7.6.1 As viewership age profiles are not available for this medium, the following rules will apply to achieve the objectives of the DF-SA Code of Conduct Commercial Communication Rules:

7.6.1.1 No billboards advertising an alcoholic beverage brand or product will be placed within 500 metres of schools, community centres or places of worship. Specifically, non-product, responsibility advertising is not included in this provision.

7.6.1.2 In the case of building wraps and billboards larger than Super 96 size, no alcohol beverage advertisement will be placed within 500 metres of schools, community centres or places of worship.

7.6.1.3 All alcohol beverage statements on outdoor media will contain one of the following statements, on an equivalent basis: “Not for Persons Under the Age of 18” or “Be Responsible. Don’t Drink And Drive” with the “Not for Persons Under the Age of 18” token.

7.6.1.4 The minimum specifications for the statements referred to in 7.6.1.4 above are as follows:

7.6.1.4.1 Arial bold is to be used as the standard font.

7.6.1.4.2 True Type Title casing is to be used.

7.6.1.4.3 A white block with a black rule at the top of the block is to be used as a holding device for the underage line.

7.6.1.4.4 The block should be 15% of the height of the advertisement.

7.6.1.4.5 The block must be at the bottom of the advertisement and must run the entire width of the advertisement. However, for large formats such as landscape wraps, the underage statement must appear at 20-metre intervals on every wrap face.

7.6.1.4.6 An Authorised Responsible Drinking Message may be included as part of the underage statement, depending on the execution, and providing it does not detract from the underage statement.

• Arial bold is to be used as the standard font.
• True Type Title casing is to be used.
• A white block with a black rule at the top of the block is to be used as a holding device for the underage line.
• The block should be 15% of the height of the advertisement.

• The block must be at the bottom of the advertisement and must run the entire width of the advertisement. However, for large formats such as landscape wraps, the underage statement must appear at 20-metre intervals on every wrap face.
• An Authorised Responsible Drinking Message may be included as part of the underage statement, depending on the execution, and providing it does not detract from the underage statement.

7.7 ADVERTORIALS

7.7.1 All advertorials must carry the Authorised Underage Drinking Prevention Statement.

7.8 DIGITAL

7.8.1 All brand sites and social media platforms must include a clearly visible responsibility message. The responsibility message must be permanently displayed and not hidden when, for example, the user is browsing the page or site.

7.8.2 Any shareable commercial assets (video, photo, text, etc.) must include appropriate responsibility messaging. For example, videos must display this message in the same way as TV advertisements and electronic broadsheets as per print material. Where a small screen format is used, for example, Instagram or Twitter, the “Not for Persons Under the Age of 18” token may be used as an alternative.

7.8.3 A responsibility message for web digital assets is defined as at least one of the following statements:

- 7.8.3.1 Don't Drink and Drive.
- 7.8.3.2 Not for Persons Under the Age of 18
- 7.8.3.3 Pregnant Women Should Not Drink Alcohol.

7.8.4 Access must be controlled through an age gate or registration process, whichever is applicable.

- 7.8.4.1 The age gate process requires users to enter their birth date, month, year, and country.
- 7.8.4.2 A registration process requires users to supply exact date of birth information and to "log in" for future visits.
- 7.8.4.3 Access can also be controlled by logging in, which relies on a user's social media profile, e.g., through an Application Programming Interface (API) like Facebook Connect.
- 7.8.4.4 Age verification software should place a cookie on a user's computer to prevent the user from leaving a site and re-entering their date of birth during the same session to gain entry to a site.
- 7.8.4.5 Those failing an age verification process must be redirected to an appropriate local social aspect website intended for underage people.

7.8.5 General guidelines for Internet digital media platforms must include a minimum execution of the following:

7.8.5.1 Don't Drink and Drive.
7.8.5.2 Not for Persons Under the Age of 18.
7.8.5.3 Pregnant Women Should Not Drink Alcohol.
7.8.5.4 AND the "Not for Persons Under the Age of 18" token.

Social media (Twitter, Facebook, Instagram, etc)

• Arial bold is to be used as the standard font.
• True Type Title casing is to be used.
• A white block with a black rule at the top of the block is to be used as a holding device for the underage line.
• The block should be 15% of the height of the advertisement.

Any shareable commercial assets (video, photo, text, etc.) must include appropriate responsibility messaging.

For example, videos must display this message in the same way as TV advertisements and electronic broadsheets as per print material. Where a small screen format is used, for example, Instagram or Twitter, the "Not for Persons Under the Age of 18" token may be used as an alternative.

Apps (small screen use)

• Arial bold is to be used as the standard font.
• True Type Title casing is to be used.
• A white block with a black rule at the top of the block is to be used as a holding device for the underage line.
• The block should be 15% of the height of the advertisement.

Any shareable commercial assets (video, photo, text, etc.) must include appropriate responsibility messaging.

Where a small screen format is used, for example, Instagram or Twitter, the "Not for Persons Under the Age of 18" token may be used as an alternative.

Website

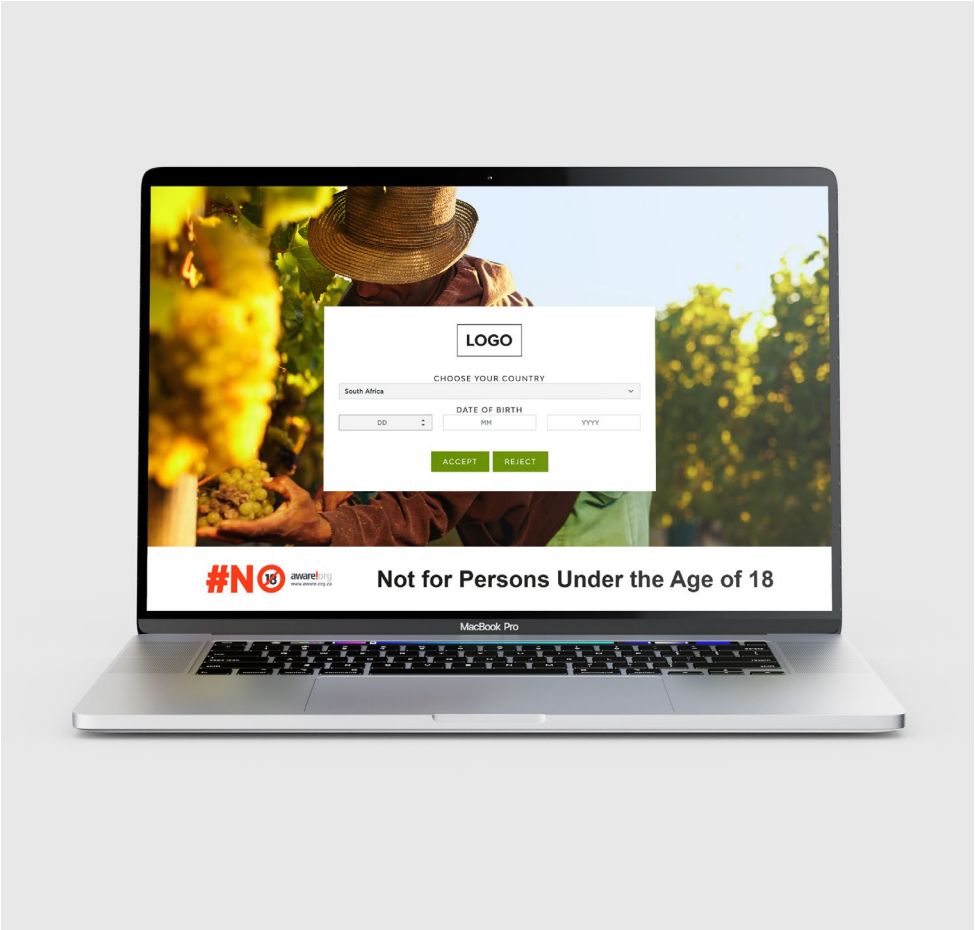

All brand sites and social media platforms must include a clearly visible responsibility message. The responsibility message must be permanently displayed and not hidden when, for example, the user is browsing the page or site.

Email marketing campaigns

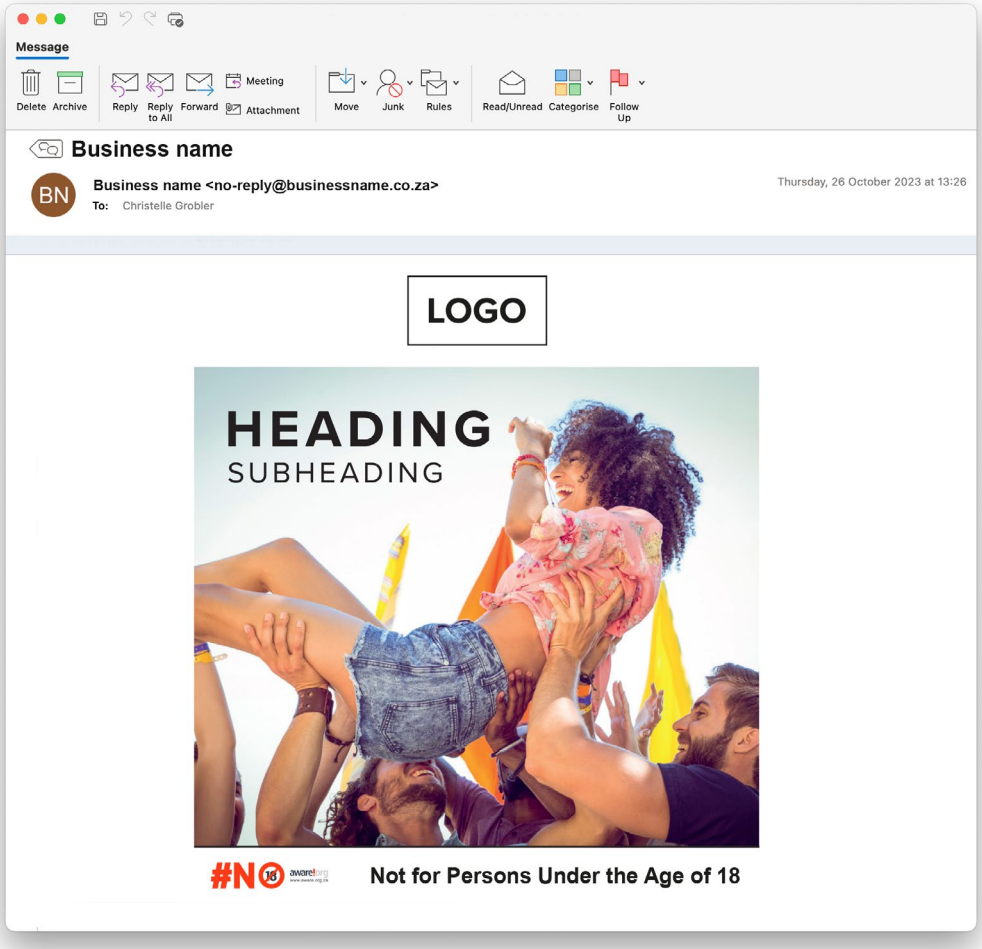

Vehicle Livery and Branded Fleets

This section serves as a general reference for the placement and alignment of logos on motor vehicles. All signage must be produced using high-quality vinyl decal material to ensure durability and professional presentation.

The logo should be centre-aligned within the door panel on both the left and right sides of the vehicle. Where the vehicle's body trim, manufacturer's logo, or other fixed features restrict the available space, the logo should be centre-aligned within the space that remains to maintain consistency and visibility.

Bakkie
This is a general reference for decal placement and alignment relationships.

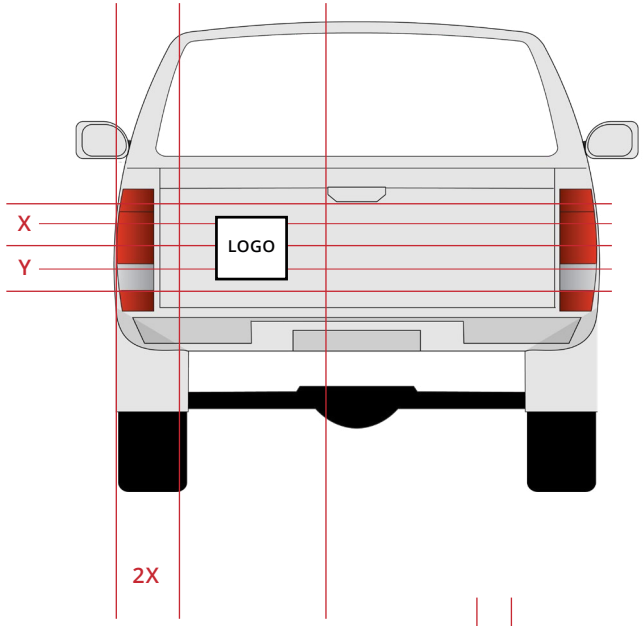

Logo centre-aligned within door panel on left side. If body trim restricts the available space, the decal should be centre-aligned within the available space.

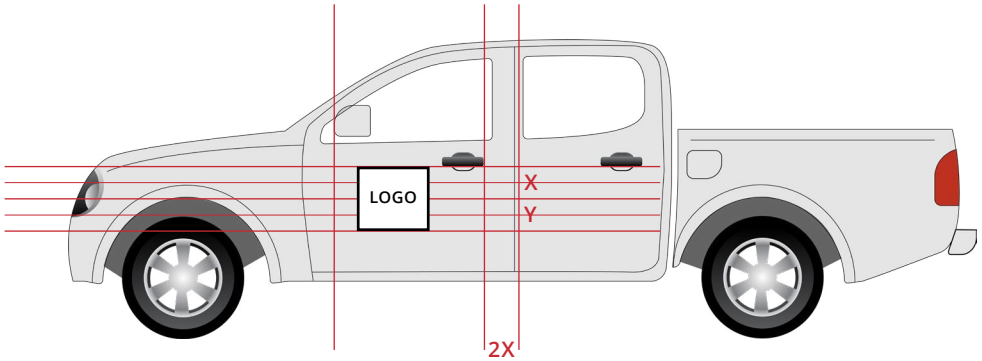

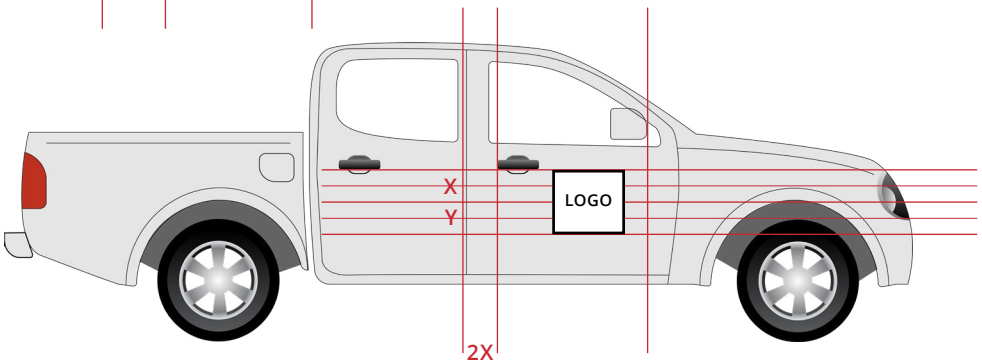

Vehicle Livery and Branded Fleets

Hatchback
This is a general reference for decal placement and alignment relationships.

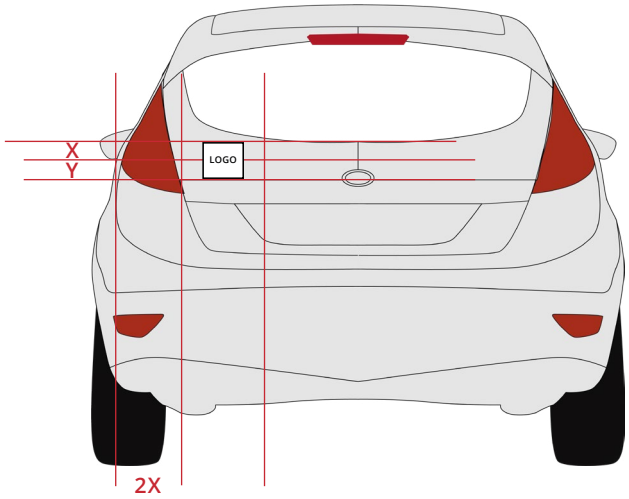

If manufacturer's badges or any other fixed items prevent the application of our emblem on the righthand side of the hatch, then position our emblem on the left-hand side as shown.

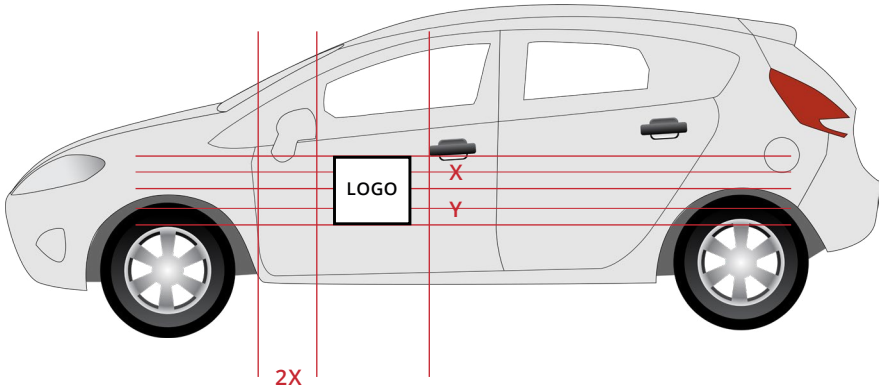

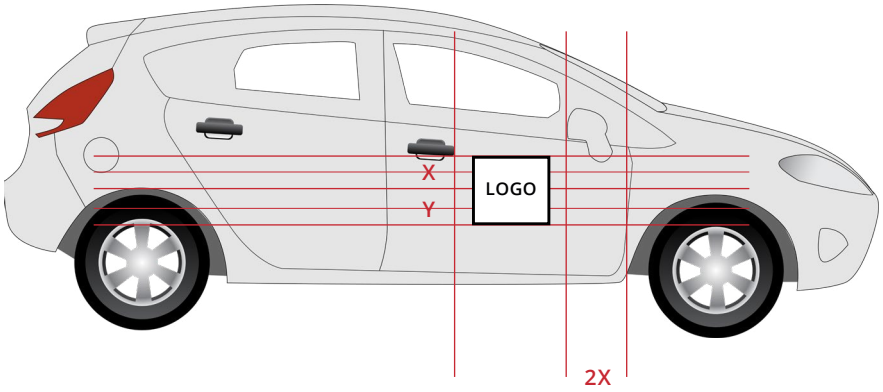

Vehicle Livery and Branded Fleets

Sedan
This is a general reference for decal placement and alignment relationships.

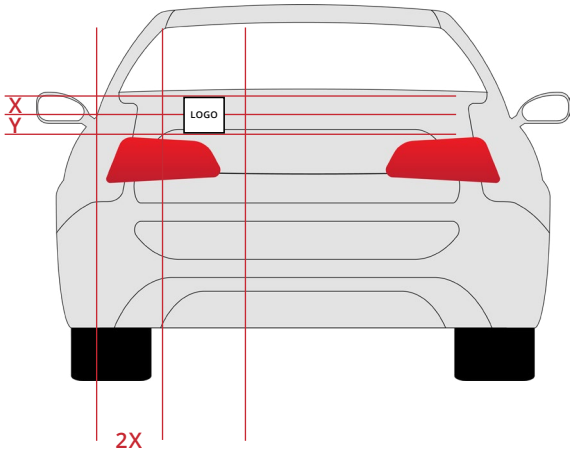

If manufacturer's badges or any other fixed items prevent the application of our emblem on the righthand side of the hatch, then position our emblem on the left-hand side as shown.

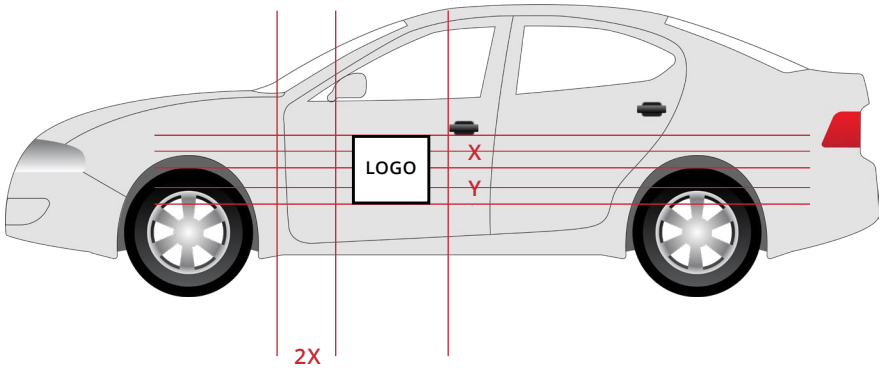

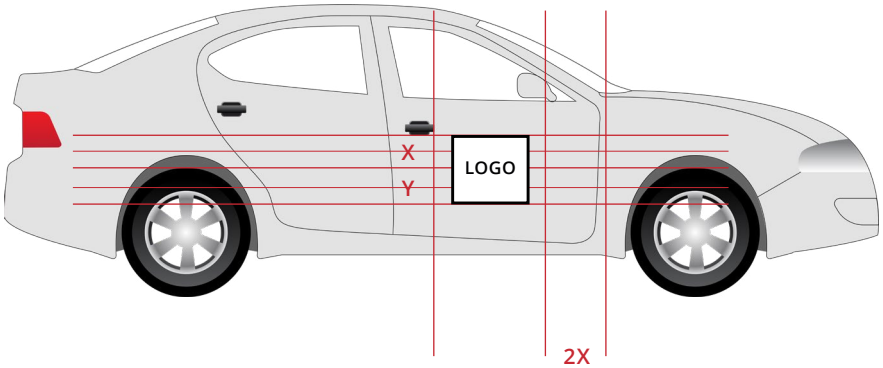

Vehicle Livery and Branded Fleets

Mini Bus
This is a general reference for decal placement and alignment relationships.

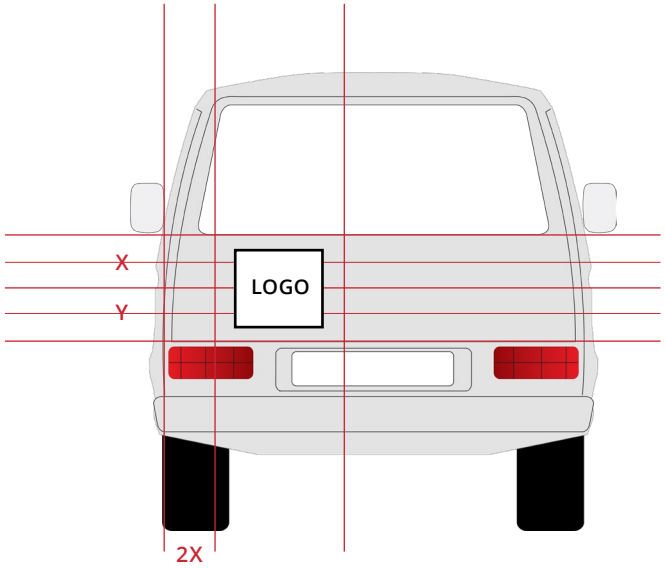

An execution
on a minibus.

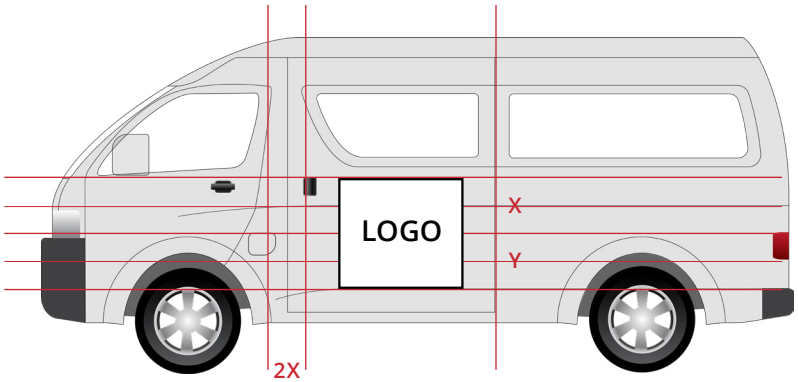

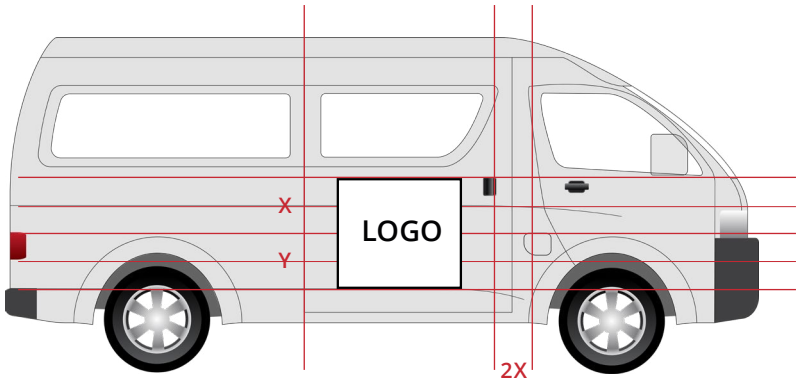

7.9 ADDITIONAL RULES FOR SPORT, MUSIC, ARTS, AND CULTURAL SPONSORSHIPS

7.9.1 In addition to 7.1.1, 7.1.2, 7.1.3, and 7.1.4, this Section 7.9 specifically applies to advertising sponsored events:

7.9.1.1 All static background images must include one of the three web digital responsible messages.
7.9.1.2 Brand-posted images must include the "Not for Persons Under the Age of 18" token.
7.9.1.3 An auto-response age disclaimer must be sent to all new followers where possible.

7.10 CELEBRITY FAN PAGES AND ADVERTISING

7.10.1 Permissible celebrity fan pages must be restricted to persons over the legal drinking age by setting the page administration section. Brands are only allowed Fan Pages, not Profile or Group Pages.

7.10.2 The perception may not be created that alcohol beverages or the consumption of alcohol resulted in a celebrity's fame or success or played any role in the achievements of a sports or popular entertainment personality.

7.10.3 Advertising or marketing material may not associate alcohol with celebrities under the legal drinking age, reflect the culture of that age group, or feature or portray actual or fictitious characters who are likely to appeal particularly to the legal drinking age in a way that might encourage them to drink.

7.10.4 Advertisements that are for the specific purpose of responsible messaging and depict a celebrity in the background of the corporate brand name may be broadcast outside the watershed period if there is no link to or mention of a specific brand or product.

“

PERMISSIBLE CELEBRITY FAN PAGES MUST BE RESTRICTED TO PERSONS OVER THE LEGAL DRINKING AGE BY SETTING THE PAGE ADMINISTRATION SECTION. BRANDS ARE ONLY ALLOWED FAN PAGES, NOT PROFILE OR GROUP PAGES.

”

7.11 ADDITIONAL RULES FOR "BRAND HOMES"

This Section applies to the production facilities that are licensed to sell alcohol beverages directly to the public or to provide products free for promotional purposes:

7.11.1 PUBLIC ROAD SIGNAGE

7.11.1.1 All billboards and other signage (excluding official, brown-coloured government tourism signs and flags) must include the following message: "Be Responsible. Don't Drink and Drive."

7.11.1.2 Directional on-site signage Brand Home entrance and exit signage must include the message: "Be Responsible. Don't Drink and Drive."

7.11.2 PRINTED MATERIAL

7.11.2.1 Notices on tasting room tables, coffee tables, bars, etc. must include the "Be Responsible. Don't Drink and Drive" message.

7.11.2.2 All other printed material (i.e., posters, brochures, flyers, pamphlets) must include the "Not for Persons Under the Age of 18" message, plus other Authorised Responsible Drinking Messages in rotation, if and where possible.

7.11.2.3 The block containing such a message should be 15% of the height of the printed material.

7.11.3 OTHER COMMUNICATION FORMATS

7.11.3.1 All advertising on secondary websites must include "Not for Persons Under the Age of 18."

7.11.3.2 "Be Responsible. Don't Drink and Drive" must be included as part of the signature on all e-mail correspondence.

7.11.3.3 Whether or not to include an Authorised Responsible Drinking Message on merchandising display stands, and other merchandising material supplied by head office brand marketing teams shall be at the producer's discretion. However, it is advisable to include it where space and format allow.

7.11.3.4 The inclusion of Authorised Responsible Drinking Messages on retail merchandise, such as souvenirs available for sale to visitors, shall be at the producer's discretion. However, it is advisable to include it where the space and format allow.

Public road signage

- All billboards and other signage (excluding official, brown-coloured government tourism signs and flags) must include the following message: "Be Responsible. Don't Drink and Drive."
- Directional on-site signage Brand Home entrance and exit signage must include the message: "Be Responsible. Don't Drink and Drive."

Printed material

- Notices on tasting room tables, coffee tables, bars, etc. must include the "Be Responsible. Don't Drink and Drive" message.
- All other printed material (i.e., posters, brochures, flyers, pamphlets) must include the "Not for Persons Under the Age of 18" message, plus other Authorised Responsible Drinking Messages in rotation, if and where possible.
- The block containing such a message should be 15% of the height of the printed material.

Other Communication Formats

- All advertising on secondary websites must include "Not for Persons Under the Age of 18."
- "Be Responsible. Don't Drink and Drive" must be included as part of the signature on all e-mail correspondence.
- Whether or not to include an Authorised Responsible Drinking Message on merchandising display stands, and other merchandising material supplied by head office brand marketing teams shall be at the producer's discretion. However, it is advisable to include it where space and format allow.
- The inclusion of Authorised Responsible Drinking Messages on retail merchandise, such as souvenirs available for sale to visitors, shall be at the producer's discretion. However, it is advisable to include it where the space and format allow.

Drinks Federation of South Africa
UNITED FOR GOOD.

THE ALCOHOL INDUSTRY COMMUNICATIONS CODE OF CONDUCT

TEL: +27 010 110 7160
E-MAIL: ADMIN@DRINKSFEDERATIONSA.CO.ZA